DeKalb Blower

BUILT 2 LAST YEAR WARRANTY

HEAVY DUTY THERMAL-MAXX™

ALL DIMENSIONS MAY BE ALTERED TO SUIT CUSTOMER APPLICATION OR SPECIFICATIONS

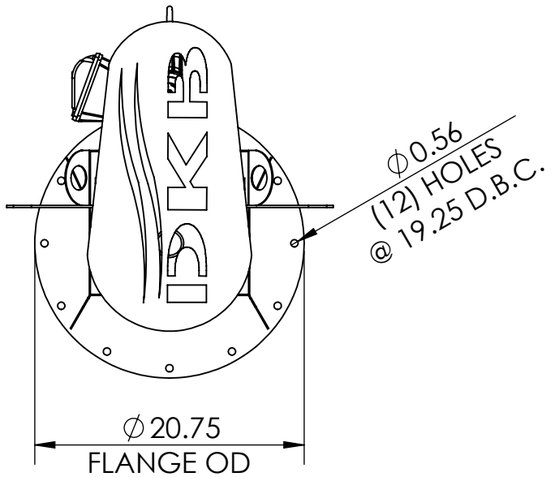

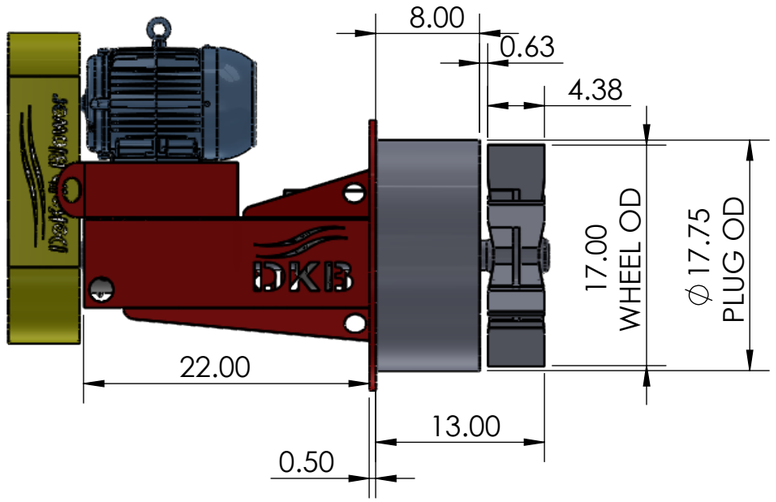

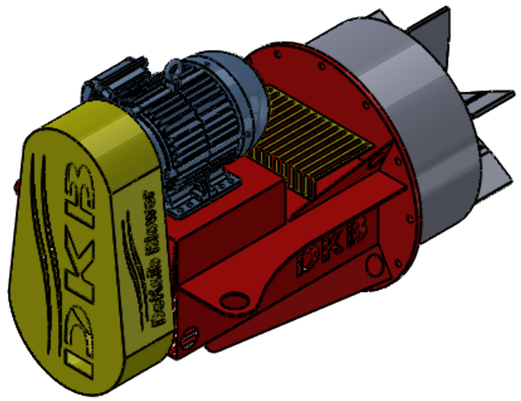

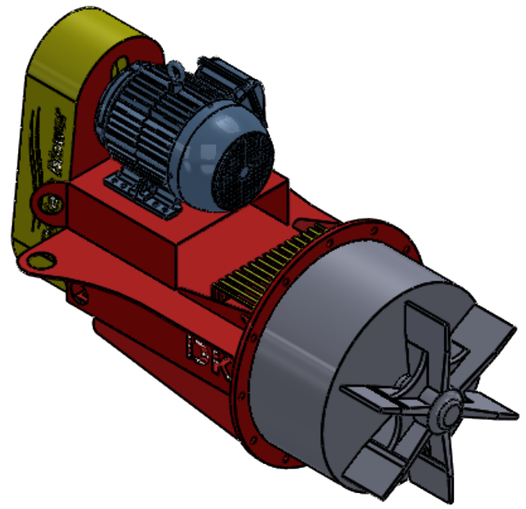

NEW PROJECT OR EXISING APPLICATION	[ ]NEW PROJECT [ ]EXISTING APPLICATION
MAXIMUM OPERATION TEMPERATURE	[ ]DEG.F
IF VFD USE PROVIDE MINIMUM AIRSTREAM TEMPERATURE FOR FULL DESIGNED CAPACITIES (CFM) FOR MOTOR SIZING	[ ]DEG.F
ROTATION	[ ]CW [ ]CCW [ ]PROXIMITY SWITCH RQD.
FAN PERFORMANCE REQUIRED @ STANDARD AIR CONDITIONS (.075#/CF@70DEG.F@29.92"HG BAR)	CFM: [ ] @ SP (INWC):[ ]
ATMOSPHERE TYPE	[ ]NONE [ ]ATMOSPHERE TYPE: [ ]
AIR OR WATER COOLED	[ ]AIR COOLED [ ]WATER COOLED
INSULATED PLUG DEPTH REQUESTED	[ ]INCHES [ ]SQUARE [ ]ROUND
MOUNTING FLANGE	[ ] SQUARE [ ]ROUND
ATMOSPHERE PIPE	[ ]NO [ ]YES
ADDITIONAL INFORMATION OR SPECIAL NOTES	

NOTICE:
UNAUTHORIZED USE, MANUFACTURE, OR REPRODUCTION IN WHOLE OR IN PART IS PROHIBITED, DRAWING DESIGN AND OTHER DISCLOSURES ARE SOLE PROPERTY OF DEKALB BLOWER INC. - P.O. BOX 516 - YORKVILLE - IL - 60560

REVISION

UNLESS OTHERWISE SPECIFIED:
DIMENSIONS ARE IN INCHES
SURFACE FINISH:
TOLERANCES:
LINEAR: +/- 1/8"
ANGULAR:
DO NOT SCALE DRAWING

	NAME	SIGNATURE	DATE
DRAWN	BRIAN		3/23/2024
CHK'D			
APPV'D			
MFG			
Q.A			

DEBURR AND BREAK SHARP EDGES
FINISH: DKB RED
GUARDING YELLOW
AIRSTREAM NONE
MATERIAL: M/S S/S
WEIGHT:

DeKalb Blower
Industrial Air Moving Equipment

TITLE: C 170 PLUG FAN

DWG NO. C 170 PLUG FAN A3

SCALE:1:12 SHEET 1 OF 1